FACTA UNIVERSITATIS (NIŠ)
SER.: ELEC. ENERG. vol. 19, no. 2, August 2006, 299-316

A Class of Circularly-Symmetric CNN Spatial Linear Filters

Radu P. Matei and Liviu Goraş

Abstract: This paper proposes a simple and efficient method for designing a class of circularly-symmetric spatial linear filters implemented on cellular neural networks. The design method relies on a so-called 1-D prototype filter, with desired characteristics and on a 1-D to 2-D spatial frequency transformation. Several design examples are given, for 2-D low-pass and band-pass filters (both of FIR and IIR type) with imposed cut-off or peak frequency and a specified selectivity. Finally, simulation results are provided, on a real grayscale biomedical image.

Keywords: Spatial filter, 2-D low-pass filters, 2-D band-pass filters.

1 Introduction

Cellular Neural Networks (CNNs) are complex dynamic systems consisting in regular arrays, made of identical elements called cells [1]. Recently, they have found useful applications in various image processing tasks ([1, 2]). Spatial filters with circular symmetry are useful in linear filtering tasks, both in digital and analog image processing [3, 4]. In the latter case, CNNs can be used as stable linear 2-D filters. The image I to be filtered is usually applied at the input ($\mathbf{U}$=I) and the initial state is usually zero ($\mathbf{X}$=0). When used in this class of tasks, CNN cells must not reach saturation during operation, which implies the restriction for the cell state: $|x_{ij}| < 1|$, $i, j = 1, \ldots, N$. Generally, the linear CNN filter is described by the spatial

Manuscript received Mart 10, 2006. An earlier version of this paper was presented at the 7th Seminar on Neural Network Applications in Electrical Engineering, NEUREL-2004, September 23-25, 2004, Belgrade, Serbia and Montenegro.

The authors are with Technical University "Gh. Asachi" of Iasi, Faculty of Electronics and Telecommunications Bd. Carol I no.11, Iasi, Romania (e-mail: `[rmatei, lgoras]@etc.tuiasi.ro`).

transfer function [5]:

$$H(\omega_1,\omega_2) = -\frac{B(\omega_1,\omega_2)}{A(\omega_1,\omega_2)} \tag{1}$$

where $A(\omega_1,\omega_2$ and $B(\omega_1,\omega_2$ are the 2-D Discrete Space Fourier Transforms (DSFT) of templates A and B.

An essential constraint regarding CNNs is the local connectivity, which is specific to these parallel systems. The design of 2-D spatial filtering functions may lead to high-order spatial filters, which require large-size templates, that cannot be directly implemented in VLSI. In fact, the templates currently implemented are no larger than 3×3, 5×5, rarely 7×7 [2]. Consequently, large templates can only be implemented by decomposing them into a set of elementary templates. Thus, a given filtering operation can be achieved as a sequence of elementary filtering tasks, directly implemented [6].

Large templates, which correspond to high order spatial filters, can be systematically decomposed as a sum of convolution products of elementary (minimum-size) templates using the Singular Value Decomposition (SVD), as shown in [7].

The most convenient templates are the so-called separable templates, which finally can be written as a discrete convolution of small-size templates. We will show here that the templates of the 2-D spatial filters resulted from 1-D prototypes can be always written as a single convolution product of small-size templates, therefore the filtering can be realized in several steps.

Correspondingly, the filtering function will be a product of elementary functions. For instance, for a 2-D IIR filter $H(\omega_1,\omega_2)$, the final image (state) can be expressed as

$$\begin{aligned} X(\omega_1,\omega_2) &= U(\omega_1,\omega_2)H(\omega_1,\omega_2) \\ &= U(\omega_1,\omega_2)H_1(\omega_1,\omega_2)H_2(\omega_1,\omega_2)\cdots H_n(\omega_1,\omega_2) \end{aligned} \tag{2}$$

The image $X(\omega_1,\omega_2) = U(\omega_1,\omega_2)H(\omega_1,\omega_2)$ resulted after the first filtering step is re-applied to CNN input, giving the second output image: $X_2(\omega_1,\omega_2) = U(\omega_1,\omega_2)H_2(\omega_1,\omega_2)$ and so on, until the whole filtering is achieved. This successive filtering is possible for any 1-D filter and for 2-D separable filters. For instance, a high-order separable 2-D filter has a large-size control template B

$$\begin{aligned} B = B_c * B_r &= (B_{c1} * B_{c2} * \cdots * B_{cN}) * (B_{r1} * B_{r2} * \cdots * B_{rN}) \\ &= (B_{c1} * B_{r1}) * (B_{c2} * B_{r2}) * \ldots * (B_{cN} * B_{rN}) \\ &= B_1 * B_2 * \cdots * B_N \end{aligned} \tag{3}$$

The separable template B is written as an outer product of the column vector B_c with row vector B_r. Then, B_c and B_r are decomposed into small templates B_{ci}, B_{rj}

(of size 1×3 or 1×5), which are then coupled in pairs, giving by outer product the elementary templates $B_1, \ldots, B_N$ (3×3 or 5×5). Here the symbol $*$ stands for both *outer product* of two vectors and *2-D convolution* of two matrices, which are associative operations, therefore can be interchanged.

Considering a 1-D recursive CNN spatial filter of order N, its transfer function can be expressed as

$$H(\omega) = \frac{\sum_{n=1}^{N} b_n \cos^n \omega}{\sum_{m=1}^{N} a_m \cos^m \omega} \tag{4}$$

According to the fundamental theorem of algebra, the numerator and denominator of (4) can be factorized into first and second order polynomials in $\cos\omega$. For instance, the numerator can be decomposed as follows

$$B(\omega) = k \prod_{i=1}^{n} (\cos\omega + b_i) \prod_{j=1}^{m} (\cos^2\omega + b_{1,j}\cos\omega + b_{2,j}) \tag{5}$$

with $n + 2m = N$ (the filter order). Correspondingly, the symmetric 1-D template B (size $1 \times N$), can be decomposed into elementary, symmetric templates of size 1×3 or 1×5, i.e. it can be written as a discrete convolution

$$B = B_1 * B_2 * \cdots * B_k \tag{6}$$

A similar expression is valid for the denominator $A(\omega)$.

Coupling conveniently the factors of $A(\omega)$ and $b(\omega)$, the filter transfer function (4) can be always written as a product of elementary functions of order 1 or 2, realized with pairs of 1×3 or 1×5 templates

$$H(\omega) = H_1(\omega) H_2(\omega) \cdots H_k(\omega) \tag{7}$$

Different useful 1-D filters (low-pass, band-pass etc.) realized with minimum size templates were proposed in [8]. Such filters, easy to design, can be considered as 1-D *prototypes* for various 2-D spatial filters.

Here we will discuss zero-phase CNN filters (FIR and IIR), i.e. with real-valued transfer functions, which correspond to symmetric control and feedback templates [5].

2 Proposed Design Method

In the following approach we propose an efficient design technique for 2-D circular-symmetric filters, based on 1-D filters, considered as prototypes. Given a 1-D proto-

type with transfer function $H_p(\omega)$, the corresponding 2-D filter function $H(\omega_1,\omega_2)$ results through the transformation $\omega \to \sqrt{\omega_1^2+\omega_2^2}$

$$H(\omega_1,\omega_2) = H_p(\sqrt{\omega_1^2+\omega_2^2}) \tag{8}$$

which can be interpreted as a *rotation* of the prototype function around its central axis, which generates the 2-D characteristic. A currently-used approximation of the 2-D cosine characteristic $\cos\sqrt{\omega_1^2+\omega_2^2}$ given by the 3×3 template

$$C = \begin{bmatrix} 0.125 & 0.25 & 0.125 \\ 0.25 & -0.5 & 0.26 \\ 0.125 & 0,25 & 0.125 \end{bmatrix} \tag{9}$$

such that we have the approximation

$$\begin{aligned} \cos\sqrt{\omega_1^2+\omega_2^2} &\simeq C(\omega_1,\omega_2) \\ &= -0.5 + 0.5(\cos\omega_1 + \cos\omega_2) + 0.5\cos\omega_1\cos\omega_2 \end{aligned} \tag{10}$$

This is also known as the McClellan transform.

The corresponding characteristic $C(\omega_1,\omega_2)$ and the constant level contours are given in Fig.1, showing a good circular symmetry in a large domain, while near the

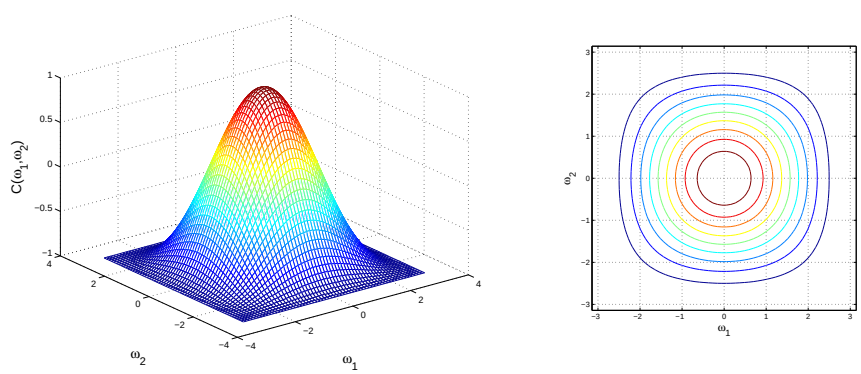

(a) (b)

Fig. 1. (a) Characteristic $C(\omega_1,\omega_2)$; (b) level contours

margins the contour shape is less and less circular. Nevertheless, compared to other realizations we will discuss, it has the essential advantage of decreasing smoothly and uniformly to the minimum value (-1) at the limits of the domain and showing no ripple. The deviation from circular symmetry is rather unimportant for the types

of filters under discussion. Let us consider a 1-D filter with the symmetric control template of radius R

$$B_p = \begin{bmatrix} \cdots & b_2 & b_2 & b_1 & b_0 & b_1 & b_2 & b_3 & \cdots \end{bmatrix} \tag{11}$$

Its frequency characteristic is given by DSFT:

$$B_p(\omega) = b_0 + 2\sum_{k=1}^{R} b + k\cos k\omega \tag{12}$$

Using trigonometric identities for $\cos k\omega$, $k = 1,\ldots,R$, we finally get a polynomial expression in powers of $\cos\omega$

$$B_p(\omega) = c_0 + \sum_{k=1}^{R} c_k(\cos\omega)^k \tag{13}$$

Considering this 1-D characteristic as a prototype and using the frequency transformation specified before, we obtain:

$$B(\omega_1, \omega - 2) = B_P(\sqrt{\omega_1^2 + \omega_2^2} = c_0 + \sum_{k=1}^{R} c_k C^k(\omega_1, \omega_2) \tag{14}$$

where we used the notation: $C(\omega_1, \omega_1) = \cos(\sqrt{\omega_1^2 + \omega_2^2})$. Therefore, once obtained the 1-D prototype filter with desired frequency response, the design of the 2-D circularly-symmetric filter consists in substituting in the prototype function $H(\omega)$ with the *circular cosine* $C(\omega_1, \omega_2) = \cos\sqrt{\omega_1^2 + \omega_2^2}$. This substitution was made in each factor of in the form (5); we can write

$$B(\omega_1, \omega_2) = k\prod_{i=1}^{n}(C + b_i)\prod_{j=1}^{m}(C^2 + b_{1,j}C + b_{2,j}) \tag{15}$$

where C is a shorthand notation for $C(\omega_1, \omega_2)$.

Since the filtering function can be written as a product of elementary functions, the 2-D filter with circular symmetry, obtained from the 1-D prototype, is *separable*, which is a major advantage in implementation.

Consequently, the large-size template B corresponding to the FIR filter $B(\omega_1, \omega_2)$ results directly decomposed into elementary, small-size (3×3 or 5×5) templates, as a discrete convolution

$$B = k(C_1 * \cdots * C_i * \cdots * C_n) * (D_1 * \cdots * D_j * \cdots * D_m) \tag{16}$$

If we use the 3×3 template C given in (9) to approximate the function $\cos\omega_1^2+\omega_2^2$, each 3×3 template C_i from (15) is obtained from C by adding the value b_i to the central element. Each 5×5 template results as

$$D_j = C * C + b_{1j}C_1 + b_{2j}C_0 \tag{17}$$

where C_0 is a 5×5 zero template, with central element one; C_1 is a 5×5 template obtained by bordering $C(3\times 3)$ with zeros.

3 FIR Filter Design Methods

3.1 FIR low-pass filter based on Fourier series

We intend to design a 2-D low-pass (LP) FIR filter with circular symmetry and specified cut-off frequency Ω_0. The proposed approach is to find an approximation of an ideal 1-D LP filter through Fourier series expansion. Consider the ideal filter function plotted in Fig.2 (curve 1)

$$H_I(\omega) = \begin{cases} 1, & \omega \in [-\Omega_0, \Omega_0] \\ 0, & \omega \in [-\pi, -\Omega_0] \bigcup [\Omega_0, \pi] \end{cases} \tag{18}$$

which generates the periodic frequency function $H_{Ip}(\omega)$, that can be developed into the Fourier series

$$H_{Ip} = \sum_m H_I(\omega - 2n\pi) = \frac{\Omega_0}{\pi} + \frac{2}{\pi}\sum_{n=1}^{\infty}\frac{\sin(n\Omega_0)}{n}\cos(n\omega) \tag{19}$$

Thus, we can find a filter approximation by truncating this series at a convenient order.

Example: For an ideal LP filter with $\Omega_0 = 0.3\pi$, keeping 12 terms, we obtain in the range $[-\pi,\pi]$:

$$\begin{aligned} H_I(\omega) \simeq\ & 0.3 + 0.515\cos\omega + 0.3037\cos 2\omega + 0.0656\cos 3\omega \\ & - 0.0936\cos 4\omega - 0.1273\cos 5\omega - 0.06236\cos 6\omega \\ & + 0.0281\cos 7\omega + 0.07568\cos 8\omega + 0.05723\cos 9\omega \\ & - 0.0468\cos 11\omega - 0.05045\cos 12\omega \end{aligned} \tag{20}$$

giving the characteristic denoted (2) in Fig.2. Using trigonometric identities for $\cos n\omega$, we get a polynomial in $\cos\omega$, which can be factorized. Replacing in each

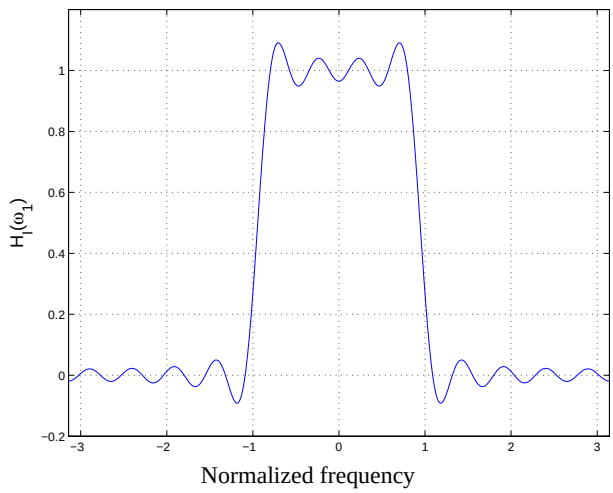

Fig. 2. Prototype filter characteristic with $\Omega_0 = 0.3\pi$.

factor $\cos\omega$ by $C = C(\omega_1, \omega_2)$, we finally get

$$\begin{aligned} B(\omega_1,\omega_2) \simeq & -103.33(C-1.0464)(C+0.9925)(C+0.9336) \\ & (C+0.8164)(C+0.654)(C-0.4631)(C+0.451) \\ & (C-0.2512)(C+0.2231)C-0.0162)(C^2-1.8298C+0.8547) \end{aligned} \tag{21}$$

For this FIR filter we take $A(\omega_1, \omega_2) = -1$. In the spatial domain, corresponding to (21), the control template is

$$B = -103.33C_1 * C_2 * C_3 * \cdots * C_10 * D_1 \tag{22}$$

where $C_1(i = 1, \ldots, 10)$ are $3*3$ symmetric templates, calculated as shown before, and is a symmetric template

$$D_1 = C * C - 0.82298C_1 +).8547C_0 \tag{23}$$

Since 5×5 templates can be implemented, 3×3 templates can be coupled two by two, leading to the convolution

$$B = -103.33C_{12} * C_{34} * C_{56} * C_{78} * C_{910} * D_1 \tag{24}$$

where $C_{12}(5 \times 5) = C_1 * C_2$ and so on. Therefore, the equivalent template B of size 25×25 can be realized as a convolution of 6 templates of size 5×5. In Fig.3(a), the frequency characteristic of the 2-D low-pass filter is displayed. It can be noticed that the filter is very steep around the cut-off frequency. Moreover, it has a

perfect circular symmetry in the pass domain and a satisfactory one within the disk of radius $2\pi/3$. Outside this disk, the contour plot shows a rather poor circular symmetry, which however is not important in the stop domain. Due to Fourier series truncation, the filter shows a radial ripple in both pass and stop domains. In Fig.4(a) another filter is shown, having the cut-off frequency $\Omega_0 = 0.5\pi$.

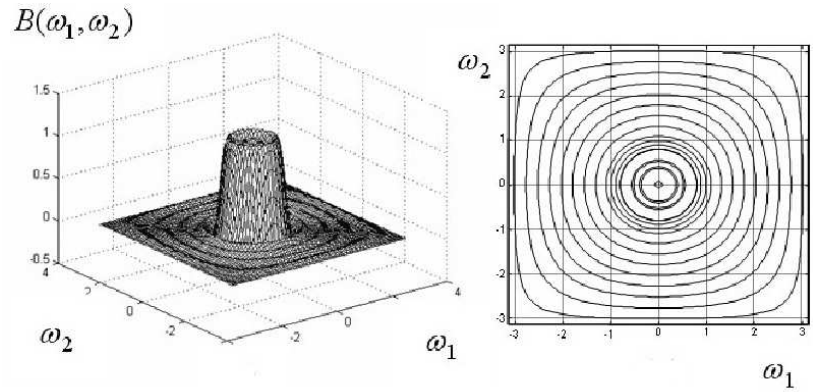

(a) (b)

Fig. 3. Low-pass circular-symmetric filter with $\Omega_0 = 0.3\pi$: (a) characteristic; (b) contour plot.

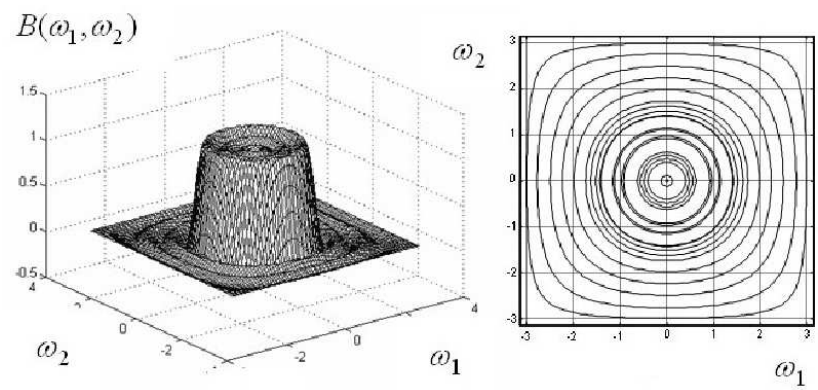

(a) (b)

Fig. 4. (a) LP characteristic ($\Omega_0 = 0.5\pi$); (b) contour plot.

3.2 FIR band-pass filter based on 1-D prototype

Let us consider the band-pass 1-D FIR filter, described by the 1×5 symmetric template $B = [r\ s\ p\ s\ r]$. The filter frequency function is the DSFT of the discrete

sequence B

$$\tilde{B} = p + 2s\cos\omega + 2r\cos 2\omega \tag{25}$$

We can impose the central frequency ω_0, for which $B(\omega_0 = 1$. Template parameters result from the design relations

$$p = \frac{1+4x_0}{2(1+x_0)^2} \quad s = \frac{x_0}{(1+x_0)^2} \quad r = -\frac{1}{4(1+x_0)^2} \tag{26}$$

where we used the notation $x_0 = \cos\omega_0$, for simplicity.

Example: We design first a band-pass filter with $\omega_0 = 4\pi$ and $\tilde{B}(\omega_0) = 1$, $\tilde{B}(\pi) = 0$. Using (26), we get the parameter values: $p = 0.5623$, $s = 0.0647$, $r = -0.2164$. The frequency characteristics of the FIR spatial filter is shown in Fig.5(a). The filter can be cast into the polynomial form

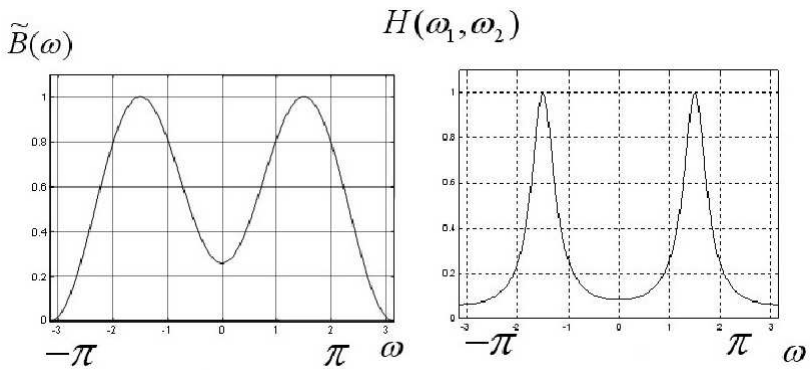

(a) (b)

Fig. 5. (a) FIR BP filter with $\omega_0 = 0.47\pi$; (b) IIR BP filter.

$$\tilde{B}(\omega) = p - 2r + 2s\cos\omega + 4r\cos^2\omega \tag{27}$$

Using the method presented before, from this 1-D prototype filter we can derive the 2-D circular-symmetric filter, with the proposed change of variable. We first use the 3×3 template C in (9) to approximate the function $C(\omega_1, \omega_2) = \cos\sqrt{\omega_1^2 + \omega_2^2}$. Doing so, we obtain the 5×5 template for the BP filter

$$B = 4rC * C + 2sC_1 + (p - 2r)C_0 \tag{28}$$

$$B = \begin{bmatrix} -0.0135 & -0.0541 & -0.0812 & -0.0541 & -0.0135 \\ -0.0541 & 0.0162 & 0.1406 & 0.0162 & -0.0541 \\ -0.0812 & 0.1406 & 0.4435 & 0.1406 & -0.0812 \\ -0.0541 & 0.0162 & 0.1406 & 0.0162 & -0.0541 \\ -0.0135 & -0.0541 & -0.0812 & -0.0541 & -0.0135 \end{bmatrix} \tag{29}$$

where the matrices C_0 and C_1 are specified before. The filter characteristics and contour plot are displayed in Fig.6. As we notice, using the 3×3 template C to ap-

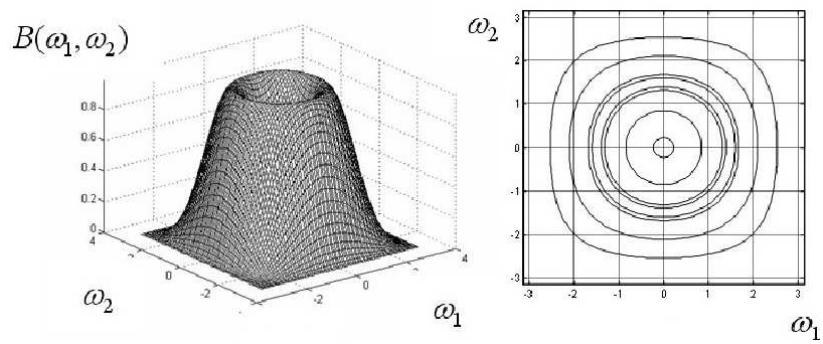

(a) (b)

Fig. 6. (a) BP filter characteristic; (b) contour plot.

proximate the desired filter does not provide a very satisfactory circular symmetry near the limits of the domain $\omega_{1,2} \in [-\pi, \pi]$. Therefore, we will try to find a 5×5 template which provides a larger domain of circular symmetry for $C(\omega_1, \omega_2) = \cos\sqrt{\omega_1^2 + \omega_2^2}$. We use a straightforward approach, by finding a trigonometric expansion of the function. Using the changes of variable: $x = \cos\omega_1$ and $y = \cos\omega_2$, becomes

$$f(x,y) = \cos\sqrt{\arccos^2 x + \arccos^2 y} \tag{30}$$

Next, we will expand the function $f(x,y)$ in a two-variable Taylor series around (1,1). The general form is

$$f(x,y) = f(1,1) + \sum_{n=1}^{\infty} \frac{1}{n!}\left((x-1)\frac{\partial}{\partial x} + (y-1)\frac{\partial}{\partial y}\right)^n f\Big|_{(1,1)} \tag{31}$$

and takes the particular expression in our case

$$\begin{aligned} f(x,y) = {} & 0.95848 + 0.91822(x+y-2) - 0.0534((x-1)^2 + (y-1)^2) \\ & +0.21246(x-1)(y-1) - 0.06986((x-1)^2(y-1) + (x-1)(y-1)^2) \\ & -0.0135((x-1)^3 + (y-1)^3) + \cdots \end{aligned} \tag{32}$$

Coming back to the initial frequency variables, ω_1 and ω_2, expanding and combining powers, then using the trigonometric identities which express $\cos^n \omega$ as a linear combination of $\cos k\omega$, $k = 0, \ldots, n$, we finally derive the following trigono-

metric expansion, which can be considered a 2-variable Fourier transform

$$\begin{aligned}\cos\sqrt{\omega_1^2+\omega_2^2} &= -0.5488+0.517(\cos\omega_1+\cos\omega_2)+0.4919\cos\omega_1\cos\omega_2\\ &+0.0284(\cos 2\omega_1+\cos 2\omega_2)-0.0349(\cos 2\omega_1\cos\omega_2+\cos\omega_1\cos 2\omega_2)\\ &+0.0252\cos 2\omega_1\cos 2\omega_2-0.0034(\cos 3\omega_1+\cos 3\omega_2)+\cdots\end{aligned} \tag{33}$$

Keeping from this series the components of frequency 0, ω_1, ω_2, $2\omega_1$, and $2\omega_2$ their combinations, we determine by identification the elements of the 5×5 template

$$C_2=\begin{bmatrix} 0.0063 & -0.0087 & 0.0142 & -0.0087 & 0.0063\\ -0.0087 & 0.1231 & 0.2588 & 0.1231 & -0.0087\\ 0.0142 & 0.02588 & -0.5488 & 0.2588 & 0.0142\\ -0.0087 & 0.1231 & 0.2588 & 0.1231 & -0.0087\\ 0.0063 & -0.0087 & 0.0142 & -0.0087 & 0.0063\end{bmatrix} \tag{34}$$

The characteristic corresponding to template C_2 is shown in Fig.7(a). Using the

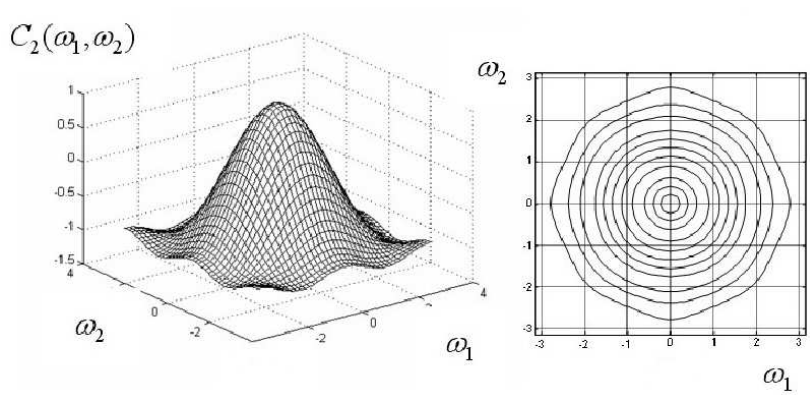

(a) (b)

Fig. 7. (a) $C_2(\omega_1,\omega_2)$ charavteristic; (b) contour plot.

template (34), we will re-design the same 2-D band-pass filter based on the 1-D prototype discussed before. All we have to do is to replace the 3×3 template C by template C_2 in eq. (28). This time, C_0 and C_1 are 9×9 templates obtained as before. We finally get a control template B of size 9×9, which obviously cannot be directly implemented. Considering the polynomial expression of $\tilde{B}(\omega)$ in (27) and taking into account the parameter expressions (26), it can be shown that for this particular filter type, $\tilde{B}(\omega)$ has always real roots, therefore template B (9×9) can be decomposed into two 5×5 templates, which can be directly implemented.

However, in practice, the marginal elements of matrix B are negligible, so we can retain only the 5×5 central matrix block without significant error. For the 2-D BP filter we will then use the template

$$B = \begin{bmatrix} 0.0011 & -0.0717 & -0.0615 & -0.0717 & 0.0011 \\ -0.0615 & 0.1670 & 0.3777 & 0.1670 & -0.0615 \\ -0.0717 & 0.0172 & 0.1670 & 0.0172 & -0.0717 \\ -0.0615 & 0.1670 & 0.3777 & 0.1670 & -0.0615 \\ 0.0011 & -0.0717 & -0.0615 & -0.0717 & 0.0011 \end{bmatrix} \tag{35}$$

The BP frequency response and contour plot are shown in Fig.8, showing a

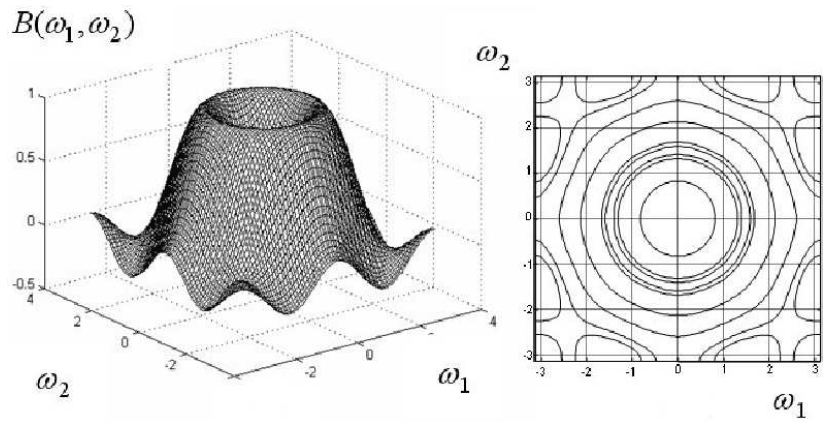

(a) (b)

Fig. 8. (a) BP filter characteristic; (b) contour plot.

larger domain of circular symmetry, but also larger ondulations near the margins of the domain.

4 IIR Filter Design Method

4.1 IIR low-pass filter

A low-pass 1-D IIR filter, arbitrarily sharp, can be realized using the symmetric feedback template: $A = [s\ p\ s]$ and the control template $B = [0\ 1\ 0]$. If the cut-off frequency Ω_0 is imposed, we obtain the parameter expressions [8]: $p = (1 - \sqrt{2})/(1 - \cos\Omega_0)$, $s = -p/2$. In Fig.9(a) the low-pass prototype characteristic is shown, obtained for $p_a = -37.6$, $s_a = r_a = 18.8$, for $\Omega_0 = 0.15$. With the change of variable introduced before, we get

$$A(\omega_1, \omega_2) = p + 2s\cos\sqrt{\omega_1^2 + \omega_2^2} \tag{36}$$

Using template C from (9), this filter is realized using the following 3×3 template:

$$A = 2sC + pC_0 = \begin{bmatrix} 4.7 & 9.4 & 4.7 \\ 9.4 & -57.4 & 9.4 \\ 4.7 & 9.4 & 4.7 \end{bmatrix} \tag{37}$$

B is a zero template, with central element 1. The 2-D IIR filter characteristic $H(\omega_1, \omega_2)$ is shown in Fig.9(b). Therefore, a LP circular-symmetric filter, as sharp

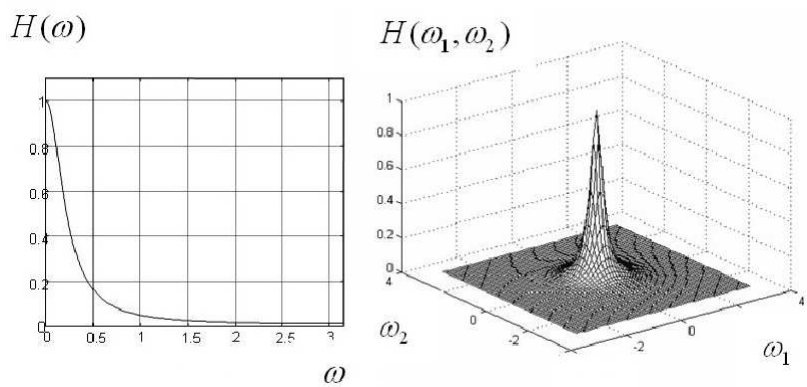

(a) (b)

Fig. 9. (a) LP prototype filter ($\Omega_0 = 0.15\pi$); (b) 2-D filter.

as desired, can be realized very efficiently in IIR version using the minimum-size (3×3) template. The smaller the cut-off frequency Ω_0, the larger the template elements.

4.2 IIR band-pass filter

It can be easily noticed that the band-pass FIR filter discussed in section 3.2 has a very low selectivity. Using the results previously obtained in the case of the low-pass filter, we can realize a recursive filter with a higher selectivity, which will have a general form for the transfer function, with the value $a > 0$

$$H(\omega) = \frac{-1}{-a - 1 + a\tilde{B}(\omega)} \tag{38}$$

Therefore, the IIR band-pass filter will be described by the feedback template

$$A = \begin{bmatrix} ar & as & A(p-1) - 1 & as & ar \end{bmatrix} \tag{39}$$

We obviously have $H(\omega_0) = 1$. The larger the value of a, the more selective the filter will be; the central frequency and bandwidth can be controlled independently.

Based on the previous selective band-pass filter as prototype, we can design a 2-D band-pass filter with circular symmetry. Using expression (25), and replacing in the transfer function (38) $\cos\omega$ by $C(\omega_1,\omega_2) \simeq \cos\sqrt{\omega_1^2+\omega_2^2}$, we obtain

$$H(\omega_1,\omega_2) = \frac{-1}{4arC^2(\omega_1,\omega_2)+2asC(\omega_1,\omega_2)+a(p-2r-1)-1} \tag{40}$$

Consequently, the filter is described by the following feedback template

$$A = a\left[4rC*C+2sC_1+(p-2r-1)C_0\right]-C_0 \tag{41}$$

where C_0 is a 5×5 zero template with central element 1 and C_1 is a 5×5 template obtained by bordering C with zeros. As it can be noticed from (41), the filter selectivity and the peak frequency can be controlled independently by adjusting the parameters a and p, s, r, respectively. The larger the value of parameter a, the more selective the filter will be. However, it can be shown that this kind of IIR filters exhibit a rather high sensitivity to parameter tolerances, inherently present in every VLSI implementation. Therefore, the selectivity practically attainable is limited by the precision of the realization of circuit parameters, depending on the technology.

Example: We design an IIR BP filter with central frequency $\omega_0 = 0.47\pi$; from (26) we obtain the following parameter values: $p = 0.5623$, $s = 0.0647$, $r = -0.2164$. Using the general expression (38) we find, for $a = 23$, the IIR prototype filter frequency response given in Fig.5(b). Based on this prototype, using the above-presented method, we derive the feedback template A using (41). The IIR BP circularly-symmetric filter frequency response $H(\omega_1,\omega_2)$ is shown in Fig.10(a) and its contour plot in Fig.10(b). The filter is very sharp, has a perfect circular symmetry and is very smooth in the stop frequency domain.

4.3 Multi-band IIR circularly-symmetric filter

A direct generalization of the IIR band-pass filter proposed in the previous section is a so-called *multi-band* filter. If $\tilde{B}(\omega)$ in (38) is a 1-D spatial cosine of a higher frequency, we obtain a prototype filter function of the form

$$H(\omega) = \frac{-1}{-a-1+a\cos(N\omega)} \tag{42}$$

If the frequency transformation (8) is then applied, we obtain a 2-D filter presenting several concentric pass-band regions. The filter will also present a narrow pass region around the origin, so the filters will be of the LP-BP type. In Fig.11 we plotted the 1-D prototype filters for $N = 3$ and $N = 5$, and the 2-D circularly-symmetric filter for $N = 3$.

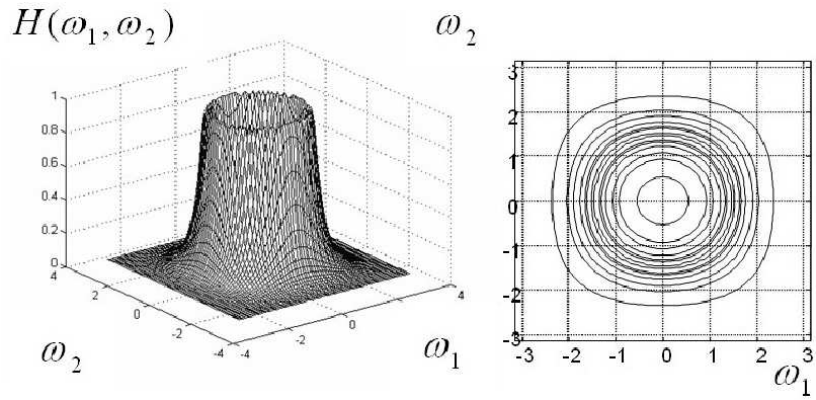

(a) (b)

Fig. 10. (a) IIR BP 2-D filter ($\omega_0 = 0.47\pi$, $a = 23$); (b) contour plot.

The denominator $A(\omega)$ of (42) corresponds to a symmetric $1 \times (2N+1)$ template; however, it can be also expressed as a N-order polynomial in $\cos\omega$ and can be factorized as in (5), so it can be implemented with 1×3 and 1×5 templates. For instance, with $N = 3$, taking $a = 12$, we get the 1×7 template, written as a convolution between 1×3 and 1×5 templates, and the factorized denominator

$$\begin{aligned} A &= \begin{bmatrix} 6 & 0 & 0 & -13 & 0 & 0 & 6 \end{bmatrix} \\ &= 0.48 \begin{bmatrix} 0.5 & -0.0091 & 0.5 \end{bmatrix} * \begin{bmatrix} 0.25 & 0.5046 & 0.7684 & 0.5046 & 0.25 \end{bmatrix} \\ &= f A_1 * A_2 \end{aligned} \tag{43}$$

$$A(\omega) = 48(\cos\omega - 1.0091)(\cos^2\omega + 1.0091\cos\omega + 0.2684) \tag{44}$$

The constant factor f can be conveniently distributed between the two templates. So the 2-D filter can be realized with a 3×3 and a 5×5 template.

5 Simulation Results

To test the filtering capabilities of some of the proposed filters, we have chosen a medical image, namely an angiography image of the liver vein system, obtained through a magnetic resonance technique (MRA). The original image, applied at the CNN input, is shown in Fig.12(a). The image (b) was obtained at the output of the LP FIR filter (Fig.3) and the effect is hardly visible. The image (c) is obtained by a very selective LP IIR filtering (Fig.9(b)) and is visibly blurred, all the fine details (small blood vessels etc.) are smoothed out. Such a filtering can be combined with non-linear operations, to extract some basic features of the image. If the image is

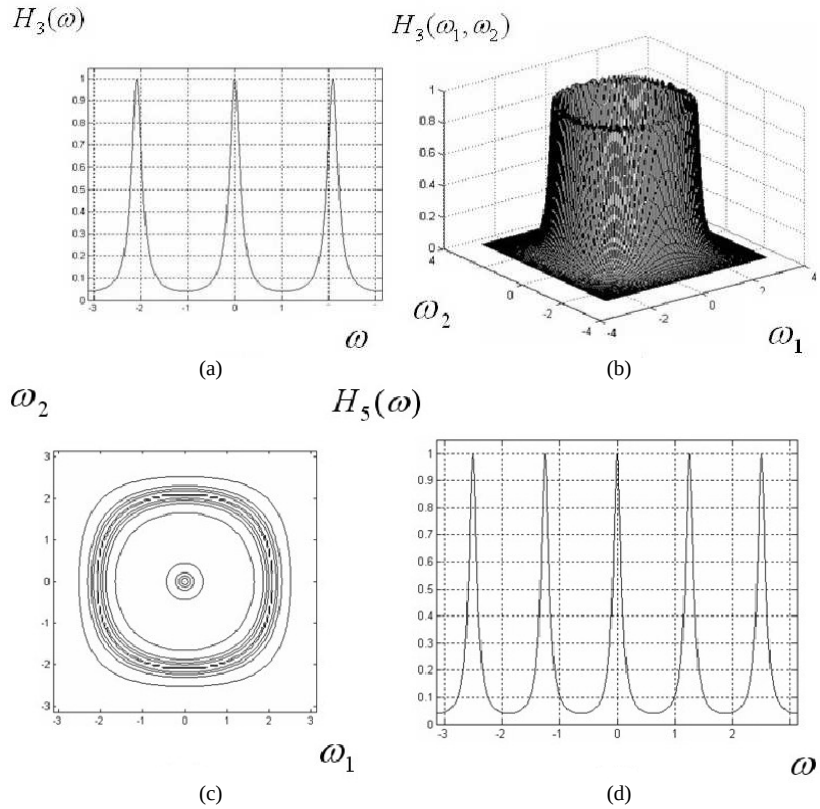

Fig. 11. (a) 1-D prototype filter ($N = 3$); (b), (c) 2-D filter frequency response and contour plot; (d) 1-D prototype filter ($N = 5$).

passed through a sharp circularly-symmetric BP filter (Fig.10), we get the image (d), in which both low- and high-frequency components are eliminated.

6 Conclusions

An efficient and convenient method was proposed for designing 2-D CNN spatial filters with circular symmetry. The method relies on a frequency transformation, which starting from a 1-D prototype, realized either in a FIR or IIR version, generates the corresponding 2-D filter, specified by the spatial transfer function in the frequency plane (ω_1, ω_2). Therefore, in order to design a circularly-symmetric filter with given specifications, we simply have to determine the template parameters for the 1-D prototype. Then, the templates for the 2-D filter will result from a simple linear combination of matrices. An important advantage is the fact that the transfer

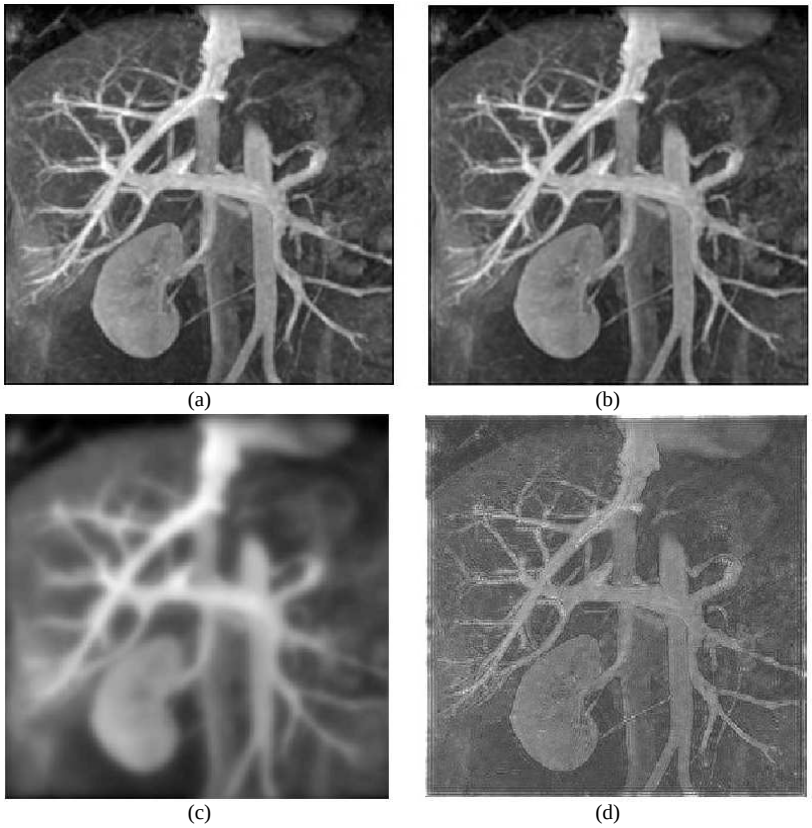

Fig. 12. (a) MRA image; (b) filtered with the LP FIR filter; (c) filtered with the selective LP IIR filter; (d) filtered with the selective BP IIR filter.

function of every 2-D filter designed using this technique can be factorized, such that the filtering can always be realized in several steps, corresponding to elementary templates.

References

[1] L. O. Chua and L. Yang, "Cellular neural networks: Theory," *IEEE Trans. on Circuits and Systems (CAS-I)*, vol. 35, pp. 1257–1272, 1988.

[2] "CNN software library version 1.1," Analogical and Neural Computing Laboratory, Computer and Automation Research Institute, MTA-SZTAKI, Budapest, 2000.

[3] W. K. Pratt, *Digital Image Processing*. New York: John Wiley, 1978.

[4] D. E. Dudgeon and R. M. Mersereau, *Multidimensional Digital Signal Processing*. Englewood Cliffs, NJ: Prentice Hall, 1984.

[5] K. R. Crounse and L. O. Chua, "Methods for image processing and pattern formation in cellular neural networks: A tutorial," *IEEE Trans. on Circuits and Systems-I*, vol. 42, no. 10, pp. 583–601, 1995.

[6] R. Matei, "Some separable linear filtering tasks using CNNs," in *Proc. of IEEE International Symposium on Signals, Circuits and Systems, SCS2003*, vol. 2, Iaşi, Romania, July 10–11, 2003, pp. 193–197.

[7] ——, "On image linear filtering using cnns with large templates," in *Proc. of the Second IEEE International Symposium on Signal Processing and Information Technology, ISSPIT'2002*, Marrakech, Maroco, Dec. 18–22, 2002.

[8] R. Matei and L. Goraş, "Elementary linear filtering tasks using cnns with minimum-size templates," *Journal of Automatic Control (JAC)*, vol. 13, no. 1, pp. 47–53, 2003, faculty of Electrical Engineering, University of Belgrade.