FACTA UNIVERSITATIS (NIŠ)
SER.: ELEC. ENERG. vol. 24, no. 2, August 2011, 169-182

VSI Sliding Mode Control with Regular Multidimensional Switching

Dedicated to Professor Slavoljub Aleksić on the occasion of his 60th birthday

Sergey Ryvkin

Abstract: The novel VSI control is offered. It is characterized by a switching normalization of the discontinued control components in a sliding mode due to a special choice of switching surfaces. The suggested design approach allows providing high dynamics and accuracy indexes of the sliding mode system in a combination with the respect of requirements on electromagnetic compatibility. The possible hardware implementation is presented. The simulation results confirm a regular structure of VSI phase serial switching

Keywords: VSI control; sliding mode system; MOSFET; multidimensional switching

1 Introduction

RAPID development of power semiconductor technologies and appearance of high-frequency power devices, such as MOSFET and IGBT was a prerequisite of the wide using of a sliding mode control technique in electromechanical systems [1–6]. These devices work mainly in "a switching mode" for achieving small power loses [7, 8]. The systems controlled using sliding mode (control based on control components switching on surfaces in plant state space) possess high speed and small sensitivity to changes of parameters and external disturbances. However, modern electromechanical systems are multidimensional ones with the multidimensional control of discontinuous components. And a control problem

Manuscript received on Jul 10, 2011.
The author is with Trapeznikov Institute of Control Sciences of Russian Academy of Sciences, Laboratory of Adaptive Control System for Dynamics Objects, Profsouznaya, 65, 117997, Moscow, Russia (e-mail: rivkin@ipu.ru).

arises with the sequence or the structure commuting these components. The existence conditions of a sliding mode, as it is known, are sufficient ones and look like inequalities and ambiguously define an algorithm of multidimensional discontinuous control. There are various possibilities for control design, which provide occurrence of sliding modes. A variety of sliding mode controls lead to a mixture of switching sequences.

Moreover, the switching frequency is achieved using modern power switches: insulated gate bipolar transistor (IGBT), metal oxide semiconductor field-effect transistor (MOSFET), Gate Turn-Off (GTO) thyristor etc [8]. Although their switching frequency can reach tens or even hundreds of kHz, it is nonetheless finite. Therefore, the resulting sliding movement is carried out in the vicinity δ of the crossing of sliding surfaces. Such sliding movement is named real sliding motion or real sliding mode.

In this sliding motion, dynamic processes of a limit cycle establishment can take place. Bifurcation changes the sequence of switching components (the transition from one limit cycle to another by arbitrary small variations of parameters). Such processes are characterized by a chaotic of multidimensional control switching [2,9,10]. The control error thus does not exceed defined values, e.g. one defined by the value of the switch hysteresis forming a control component. However the change dynamics and a chaotic switching lead to deterioration of electrical drive technical and economic indicators because of sharp increase of switching losses, admissible excess from a position of electromagnetic compatibility of frequency ($>$ 10 kHz), occurrences of acoustic noise (1-2 kHz) at the expense of influence of Lorentz force on the engine ferromagnetic materials [7].

It is obvious that maintaining regular switching in a real sliding mode allows eliminating the drawbacks mentioned above and, as a consequence, it improves the electrical drive technical and economic indicators. One from the possible variants of such discontinuous controls will be presented below.

2 Voltage Source Inverter (VSI)

VSI transforms a dc input voltage in three-phase variable voltages of a constant or variable frequency and/or amplitude [8]. To obtain the needed phase voltage, the voltage transformation pulse method is used. It is based on the application of a switch operation mode of power semiconductor devices (switches). They connect any output phase load to positive or negative pole of a constant voltage source U_{in}.

One of the most widespread VSI schemes is the three-phase bridge scheme with the isolated neutral, shown in Fig. 1. It represents a parallel connection of three phases on-off power switches K_j $(j = R, S, T)$. Depending on a control signal p_j

$(p_j \in \{0,1\})$ each of them connects the VSI output phase load either to a positive potential, or to the negative one of the constant input voltage U_{in}.

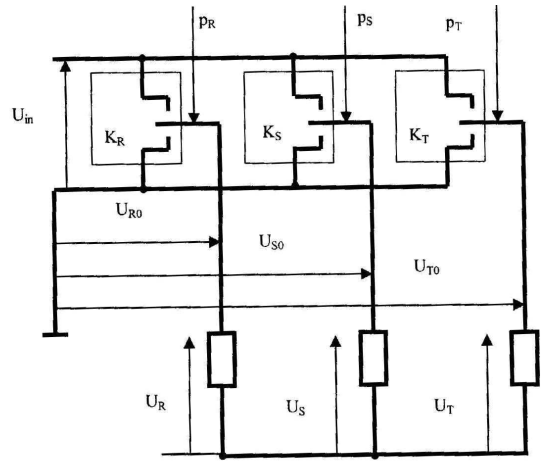

Fig. 1. The simplified schema of the three-phase VSI bridge.

Thus, depending on a control signal each output phase voltage U_{j0} is equal at any moment or to input constant voltage U_{in}, or zero.

In this case the vector of output voltage VSI $U^T = (U_\alpha, U_\beta)$, in a fixed orthogonal coordinate system $(\alpha,\ \beta)$, is defined as:

$$\begin{bmatrix} U_\alpha \\ U_\beta \end{bmatrix} = \frac{2}{3} \begin{bmatrix} 1 & -\frac{1}{2} & -\frac{1}{2} \\ 0 & \frac{\sqrt{3}}{2} & -\frac{\sqrt{3}}{2} \end{bmatrix} \begin{bmatrix} U_{R0} \\ U_{s0} \\ U_{T0} \end{bmatrix} \tag{1}$$

where numerical factors of a transformation matrix are directing the phase load orts $(R,\ S,\ T)$. As phase voltages have relay character the voltage output vector U can accept only seven values (Fig. 2): one of which is zero U_0, and other six U_k $(k = 1,\ldots,6)$ are not zero and also are the tops of the correct hexagon. Its symmetry axes are directed on the phase load orts.

The module of the above mentioned six nonzero vectors depends on the load connection circuit and the value of the input dc line voltage U_{in}. In the load, connected as "star" circuit, it is equal to $2U_{in}/3$. The combinations of phase switches $(p_R,\ p_S,\ p_T)$ controls are near the possible vectors of the output voltage Uk presented in Fig. 2. A zero vector corresponds to two combinations of the switch positions: either all are connected to positive potential (111), or to negative potential (000).

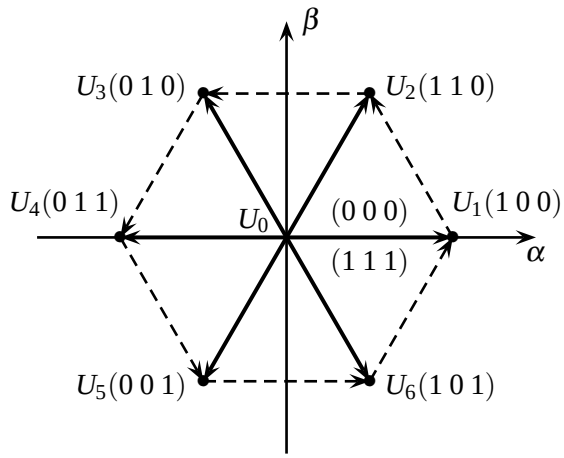

Fig. 2. Vectors of VSI momentary output.

3 VSI Control Design

From the viewpoint of noise abating, the regular switching of VSI switches consisting in cyclic transitions between the nearest vectors of VSI instant output voltage (Fig. 2) is quite attractive. Such law leads to serial switching of VSI phase switches, and the switching sequence remains invariable by all values of an average (during modulation period) voltage vector.

The control design problem consists in working out control of such commands for the VSI phase switches, that provide the regulation and desired (in agreement with Fig. 2) character of the VSI instant output voltage vectors switching in real sliding movement.

When implementing a particular vector of instantaneous voltage, a change of direction of the current (or, in the quasi-static mode, at a relatively slow paced setting the current direction of change in the current implementation errors), determined by the difference vectors of instantaneous voltage and average voltage vector. The selecting criterion for the boundaries of switch control is desirable process of occurrence of real sliding mode, i.e. the process of establishing the sequence and the modulation period for arbitrary initial values of the current error vector.

That dynamic process of establishing the limit cycle characterizing the real sliding mode occupies a finit time and comes to an end for the final number of switching power switches. It is necessary that that border areas coincide with the trajectories realized in real sliding mode.

The power switching function of each VSI phase is characterized by symmetric

"hysteresis" by small values of the VSI output voltage vector (Fig.3).

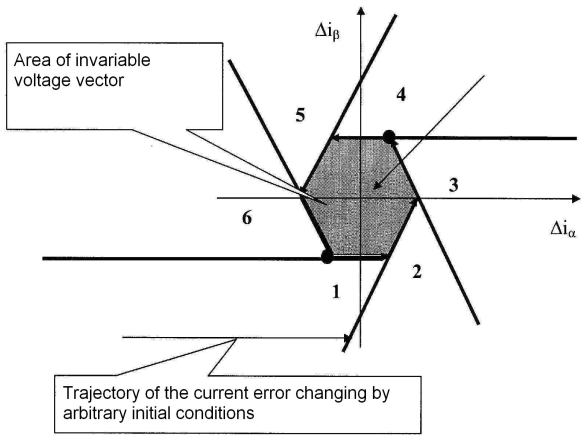

Fig. 3. Limit cycle for small values of U_{eq}.

In contrast to the relay phase current regulator in the vector control, the input of the hysteresis element of each phase receives no error in the current phase, but a linear combination of the current phase errors.

In a central current error area (neighborhood of the zero current error point) due to hysteresis remain the former values of instant voltage vector control (the control command combinations (000) and (111), corresponding to VSI output zero voltage are forbidden). This form of a limiting cycle in the current error space differed from a correct hexagon by big values of a VSI output average voltage vector (near the maximal value).

As concluded from Fig. 3, the essence of the offered design approach of the vector relay tracking system consists in the formation of control switching areas borders in the current error space. These border directions coincide with ones of the difference between the VSI instant voltage vector and the average one, and they are apart by an equal distance from the origin of coordinates. (This distance is the parameter defining the switching frequency). In this case the realization duration of any instant voltage vector in a cycle is not equal to zero. Thus, the same sequence commuting always remains. It is true, if the average voltage vector does not overstep the bounds of the realized voltage vector area.

The offered approach allows designing VSI power switch control for the current closed loop, which is presented below.

Let us define directing vectors of area borders:

$$
\begin{aligned}
E_1 &= \sqrt{\frac{2}{3}} U_{in}(0,-1)^T - (U_{eq\beta}, -U_{eq\alpha})^T, \\
E_2 &= \sqrt{\frac{2}{3}} U_{in}(\frac{\sqrt{3}}{2}, -\frac{1}{2})^T - (U_{eq\beta}, -U_{eq\alpha})^T, \\
E_3 &= \sqrt{\frac{2}{3}} U_{in}(\frac{\sqrt{3}}{2}, \frac{1}{2})^T - (U_{eq\beta}, -U_{eq\alpha})^T, \\
E_4 &= \sqrt{\frac{2}{3}} U_{in}(0,1)^T - (U_{eq\beta}, -U_{eq\alpha})^T, \\
E_5 &= \sqrt{\frac{2}{3}} U_{in}(-\frac{\sqrt{3}}{2}, \frac{1}{2})^T - (U_{eq\beta}, -U_{eq\alpha})^T, \\
E_6 &= \sqrt{\frac{2}{3}} U_{in}(-\frac{\sqrt{3}}{2}, -\frac{1}{2})^T - (U_{eq\beta}, -U_{eq\alpha})^T,
\end{aligned}
\tag{2}
$$

It is accepted that the characterizing switching surface by a directing ort e_i $(i = 1, \ldots, 6)$ is orthogonal to the surface (line). To do this, normalize the previous expressions (2) by dividing them by the absolute value of the orthogonal switching surface vector, $e_i = E_i / \mod (E_i)$. Each surface is separated from the origin in the current error space at an equal distance, denoted by the distance symbol δ (Fig.4).

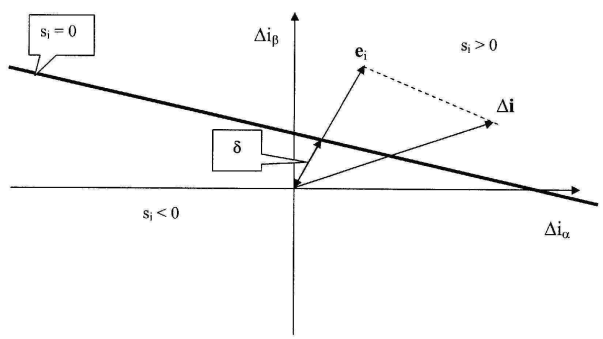

Fig. 4. Formation of the switching surface.

The switching function s_i is formed as the inner product of the current error vector $\Delta i = (\Delta i_\alpha, \Delta i_\beta)$ and the directing ort e_i (i.e. the Δi projection and the directing ort), with the additive component δ, characterizing the distance between the switching surface and the origin:

$$
s_i = (\Delta i, e_i) - \delta = \Delta i_\alpha e_{i\alpha} + \Delta i_\beta e_{i\beta} - \delta. \tag{3}
$$

To obtain the δ estimation let us consider a switching cycle for small values of the average voltage vector $(U_{eq} = 0)$. The cycle consists of six motions, the distance moved by the current error vector for each motion is $2\delta/\sqrt{3}$, and the speed of the current error vector is equal to $\sqrt{2/3}U_{in}$.

Therefore, the cycle duration T is $T = 12\delta/\sqrt{2}U_{in}$. Hence, by a reference value of T, the corresponding value δ is determined by

$$\delta = TU_{in}\frac{\sqrt{2}}{12} \tag{4}$$

The base method of the control switching area borders formation in real sliding movement is described above. We assume now that the switching functions $\mathrm{sg}(s_i)$ are generated. According to relay control the signs of these functions (logic signals) in the area must be defined. Required space splitting is defined by crossing the control area borders. The desired partition in sectors is given by the intersection of two neighboring borders of switching control, and the sign of the logical function of one of them is equal to ”1” and the other to ”0”. Possible combinations of logic (sign) functions $(\mathrm{sg}(s_1), \ldots, \mathrm{sg}(s_6))$ for these sectors and sector numbers are shown in Fig. 5 (the values of sign functions that do not influence on the area selection are marked with an asterisk $(*)$).

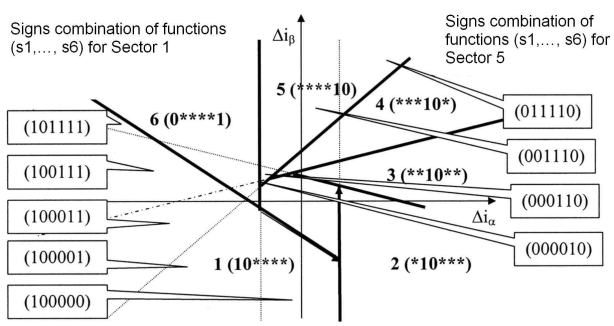

Fig. 5. Signs combinations of control switching functions.

E.g., the current error vector is in the sector 5. As shown the Fig. 4 the signs of the switching functions s_4 and s_5, i.e. $\mathrm{sg}(s_4) = 0$, $\mathrm{sg}(s_5) = 1$, define clearly the vector position in this sector, then the signs of the other switching functions in this sector are arbitrary (may be equal to 0 and 1, depending on the position of the affix in a particular area in this sector). In sector 1 $\mathrm{sg}(s_1) = 1$, $sg(s_2) = 0$, and the signs of the other four switching functions can be equal to “1” or “0”.

These examples show that in general, to determine the sector in which the current control error vector is, it is necessary to use the values of two (out of six)

switching functions. The combination of characters is uniquely determined by the sector of the current error vector.

So, if the affix is in one of six sectors out of the area near the origin of coordinates possible combinations of switching functions signs are characterized by the sequence of the values ”1” going successively (with cyclic shift), and “0”, also going successively. The position of last “1” in sequence defines the sector number. However, such control structure is fair only by ”the correct” sector organization, when crossing their borders defines the convex hexagon that is a limit cycle trajectory of current error changing. In the presence of uncorrelated noise in switching function signals, the “correct” control structure of the switching functions can be broken, and an unequivocal definition of sector on the base of two corresponding switching function signs is impossible. In such cases it is necessary to work out the special measures preventing “false” appointments of VSI switch controls.

Control selection should satisfy the following conditions:

- It should provide the desired limit cycle, i.e. the sequential switching of VSI power switches phases.
- A hitting of the image point on the limit switching cycle should be provided from random initial conditions, as well as any changes of the current value of the current error (accidental, caused by noise measurements, or an implementation error, or caused by changes of the current value of the reference).
- The hitting should occur within a finite time and finite number of power switchings.

The important condition is also noise immunity of this follow-up control plant: presence of noise in input signals of the comparators defining of switching function signs should not lead to changes of VSI switch control commands, at least by small enough noise level. Therefore control selection cannot be unequivocal (on all phases) by an accessory of a current error vector to this or that sector. The presence of inevitable discrepancies and noise by the current measurement could lead to instant (with noise frequency) to switch control command changing. There is a necessity using additional ”hysteresis” in the control loop for ”cutting” noise of measurement noises with small amplitudes.

Using “hysteresis” assumes the presence of VSI control command memory or switching function memory and implementation of additional conditions of control command selecting similar to switching device hysteresis forming by the scalar relay control. It is convenient to realize hysteresis in vector follow-up control plant by using VSI control command memory. The control shown in Fig. 6 satisfies these conditions.

In Fig.6 use of bold type indicates VSI(R, S, T) switch control command phases: 1 - to switch-on the line $(+)$, 0 - to switch-on line $(-)$ of a direct current link. The

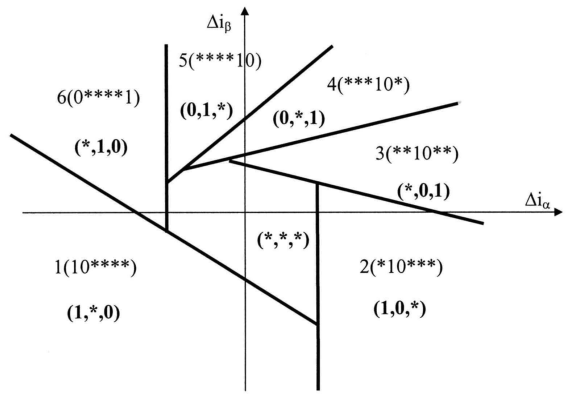

Fig. 6. Phase switching control command.

symbol $(*)$ means that the control command for this phase switch in this sector is not defined. It could be 0 or 1, e.g. stored previous value. It is not defined in the central sector (retain their previous values). The control of all phases, however, control command combinations $(0,0,0)$ or $(1,1,1)$ are forbidden. It avoids the frequent change of phase control commands by the current error affix movement in the neighborhood of any switching control boundary ("vector" hysteresis).

In Fig. 7 for the sector 1 the possible motion trajectories by the initial conditions $(\Delta i_{\alpha 0}, \Delta i_{\beta 0})$ are shown. There are two possible movements depending on the phase S control command (due to symmetry, the movements in other sectors have the same features).

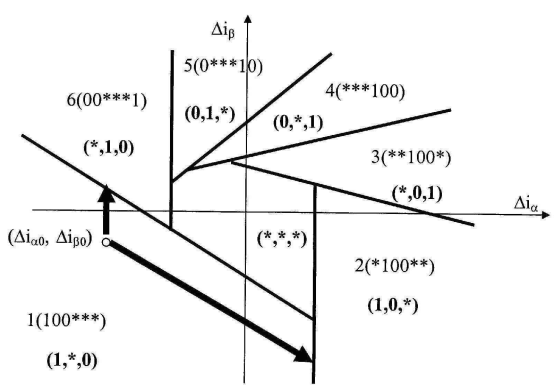

Fig. 7. Initial movement in sector 1 by arbitrary initial conditions.

4 Simplified Control

Switching functions (3) were defined earlier as scalar products of a current error vector and a directing ort of the corresponding area border. However for control design only logic (sign) values of this switching functions sg(si) are used. Obviously, the function sign s_i will not change, if it is multiplied by a positive number equal to mod (E_i). Thus, the switching function assumes the following form:

$$\begin{aligned} s_i =& (\Delta i_\alpha e_{i\alpha} + \Delta i_\beta e_{i\beta}) \quad \text{mod}\,(E_i) - \delta \quad \text{mod}\,(E_i) \\ =& (\Delta i_\alpha E_{i\alpha} + \Delta i_\beta E_{i\beta}) - \delta \quad \text{mod}\,(E_i) \end{aligned} \tag{5}$$

The first term in the equation (5) after substitution of variable E_i, could be rewritten in the form of the sum of scalar product of a current error vector and the directing vectors defining directions of VSI output instant voltage vectors and scalar product of a current error vector and average voltage vector:

$$\begin{aligned} \Delta i_\alpha E_{i\beta} + \Delta i_\alpha E_{i\beta} &= \Delta i_\alpha U_{i\alpha} - \Delta i_\beta U_{i\alpha} - \Delta i_\alpha U_{eq\beta} + \Delta i_\beta U_{eq\alpha} \\ &= \sqrt{\frac{2}{3}} U_{in} (\Delta i_\alpha e_{i\beta} - \Delta i_\beta e_{i\alpha}) - \Delta i_\alpha U_{eq\beta} + \Delta i_\beta U_{eq\alpha} \end{aligned} \tag{6}$$

Since the components of direction instant voltage vectors e_i are predetermined and known, the coefficients before the current error components of the current error Δi_α, Δi_β in the first term can be calculated in advance. And for this term calculation adders of current error components can be used. Scalar product of the error current vector and the average voltage vector can be calculated by using adders and two multiplying digital-analog converters (their digital inputs get slowly changing components of average voltage; their analog inputs get current components). It is very important that the same scalar product be used in calculations of all six of switching functions s_i.

For the calculation of switching functions is also necessary to compute (in the processor) the values of distances between the switching surfaces and the origin of coordinate, i.e. the module of the difference between the instant voltage vectors and the average one). It is useful to make a valuation of switching functions by completing the multiplication by $\sqrt{2/3}Uin$ in the processor part to simplify the hardware.

5 Follow-up current vector control structure

Hardware implementation of vector relay control included a built-in an energy-efficient VSI control. Vector control was has not been widely used mainly due to the complexity of setting up this control, but there still remains an urgent design

problem of an electrical drive with digital, software-implemented system of relay-vector control. Such drive would have robustness to the changing semiconductor power converter parameters, with the existing physical constraints of speed, as well as the known advantages of digital control systems, namely: self-testing, auto-tuning, wide front-end and other features.

The structure of the proposed servo drive is shown in Fig.8. The system contains the following components: current error coordinate transformer, block computation of the switching voltages boundaries, comparators, logical transformers, taking into account the specified algorithm switching control. Coordinate transformers can be implemented using digital-analog converters; the control processor could compute the current error transformation coefficients.

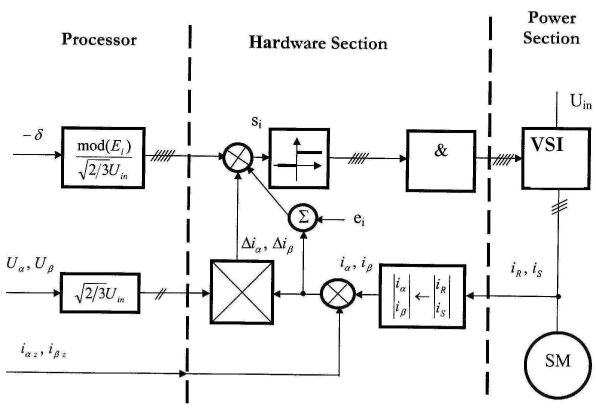

Fig. 8. Servo drive structure.

6 Test simulation of a servo loop

A test simulation of the proposed servo control was carried out with the following goals:

- Verify the working of the servo loop;;
- Identify of operational mode areas;
- Define follow-up errors and the design of their compensation methods;
- Identify the sensitivity of the PWM servo control to inaccuracies formation of switching functions;
- Determine the extent of the servo loop noise immunity;
- Requirements definition to the hardware and software PWM blocks (speed, capacity, word length, etc.);

- Identify possibilities to simplify the hardware;
- Develop proposals for implementing the servo PWM control.

Regarding the use of the servo PWM control in electrical drives, it should be noted that the feed back PWM, or the VSI with a close loop PWM that could be named controlled current source, is aimed for use in fairly complex drives with vector control. Electrical drive structure is not important by the PWM control simulation. So it makes sense to conduct simulations for a simplified scheme of the power unit, reflecting substantial (for a closed loop PWM control design) features of the VSI load. Such simplification may be in the representation of VSI three-phase load as two-dimensional one (in the generalized system) and an inductive load connected in series with it, and a voltage source with two independent components. The values of the latter are exactly the values of the components of the equivalent voltage.

This load is connected in series with a voltage source with two independent components. Their values are exactly the values of the components of the equivalent voltage. In real electrical drives, the values of fundamental frequency of the VSI output voltages and of the PWM frequency are selected (tens to hundreds of Hz for the first and the units-tens of kHz for the second). It allows by simulation to use a constant (quasi-statically varying) voltage source in the VSI load, as well as constant (quasi-statically changing) current component references for the closed loop PWM control. These assumptions allow closing the PWM loop without taking into account the specifically features of the used motor.

A simulation was done using Matlab/Simulink and the results are shown in Fig. 9.

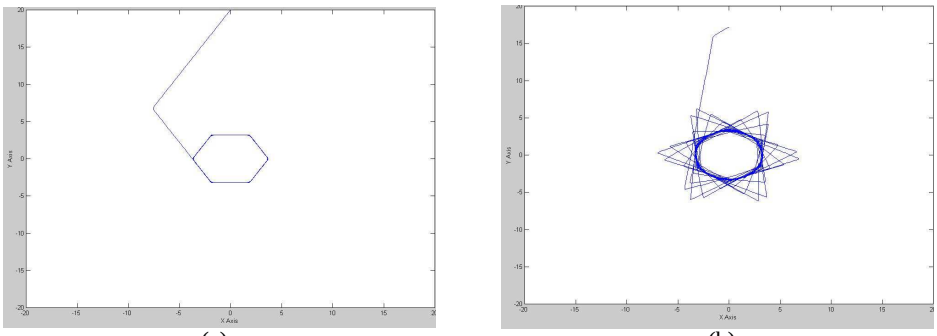

(a) (b)

Fig. 9. Current error vector time plots by various values of the VSI average output voltage. (a) zero, (b) 80% from the maximum realizable value per unit.

The presented current error vector time plots show that the suggested switch control provides regular structure of VSI phase serial switching and it is not dependent on the average value of the VSI output voltage vector. Also, by the small values of a VSI output average voltage, thanks to symmetric ”hysteresis” of the switching functions of each VSI phase power switch a limit cycle of self-oscillations, i.e. a correct hexagon has been established at once. In contraposition to it, large VSI output average voltage values of the switching function (3) differ from symmetric hysteresis. The process of establishing a limit cycle is extended, and the limit cycle differs a little from a correct hexagon.

7 Conclusions

It has been shown that there is a possibility of eliminating one of the disadvantages of the real sliding mode control: a chaotic switching of multidimensional control components.. It is a source of deterioration of electrical drive technical and economic indicators because of sharp increase of switching losses, admissible excess from a position of electromagnetic compatibility of frequency ($>$ 10 kHz), occurrences of acoustic noise (1-2 kHz). The maintaining regular switching in real sliding mode is provided with using the special switching lines. The original VSI control integrates all merits of sliding mode control: a good dynamics behavior and reducing of the influence of disturbances, and a merit of the fixed switching frequency. The commutation and modulation laws for each switch are automatically serving in real sliding mode. The possible hardware implementation is presented. The simulation confirms a regular structure of VSI phase serial switching that is not dependent on the average value of the VSI output voltage vector.

References

[1] G. S. Buja and M. P. Kazmierkowski, “Direct torque control of PWM inverter-fed AC motor - a survey,” *IEEE Trans. Ind. Electron*, vol. 51, pp. 744–757, 2004.

[2] C. Lascu, I. Boldea, and F. Blaabjerg, “Variable-structure direct torque control - a class of fast and robust controllers for induction machine drive,” *IEEE Trans. Ind. Electron.*, vol. 51, pp. 785– 792, 2004.

[3] S. Ryvkin, “Sliding mode technique for ac drive,” in *Proc. 10th Int. Power Electron. & Motion Control Conf., EPE - PEMC 2002*, Dubrovnik & Cavtat, Croatia, Sept. 2002.

[4] A. Sabanovic, K. Jezernik, and N. Sabanovic, “Sliding mode applications in power electronics and electrical drives,” in *Variable Structure Systems: Towards the 21 Century*. Berlin, Germany: Springer - Verlag, 2002, pp. 223 –252.

[5] V. Utkin, J. Shi, and J. Gulder, *Sliding modes in electromechanical systems*. London, UK: Taylor & Francis, 1999.

[6] J. Vittek and S. J. Dodds, *Forced dynamics control of electric drives*. Zilina: EDIS - Publishing Center of Zilin University, 2003.

[7] J. Holz, "Pulsewidth modulation for electronic power conversion," *IEE Proc.*, vol. 82, no. 8, pp. 1194–1213, 1994.

[8] N. Mohan, T. M. Underland, and W. P. Robbins, *Power electronics: converters, applications and design*, 3rd ed. New York, USA: John Wiley & Son Inc., 2003.

[9] I. Nagy, "Improved current controller for PWM inverter drives with the background of chaotic dynamics," in *Proc. 20th Int. Conf. Ind. Electron., Control and Instrumentation, IECOM'94*, Bologna, Italy, Sept. 1994, pp. 561–566.

[10] Z. Suetz, I. Nagy, L. Backhauz, and K. Zaban, "Controlling chaos in current forced induction motor," in *Proc. 7th Int. Power Electron. & Motion Control Conference, PEMC'96*, vol. 3, Budapest, Hungary, Sept. 1996, pp. 282–286.